CITY OF COQUITLAM

ZONING BYLAW NO. 3000, 1996

The Council of the City of Coquitlam, in open meeting assembled, enacts as follows:

PART 1 SHORT TITLE

101 Citation

This Bylaw may be cited as the "City of Coquitlam Zoning Bylaw No. 3000, 1996".

Partial Information only refer to City of Coquitlam Zoning Bylaw

PART 2 INTERPRETATION

201 Definitions

For ease of use, all words appearing in *italics* are defined terms under this Bylaw.

In this Bylaw:

ACCESS DRIVEWAY means the area between the *roadway* or *street* and required *parking spaces* which provide an approach to said *parking spaces*.

ACCESSIBLE RESIDENTIAL means a *residential use* that allows persons with disabilities, without assistance, to be able to approach, enter, pass to and from, and make use of an area and its facilities, consistent with the standards outlined by Canada Mortgage and Housing Corporation.

ACCESSORY ADVERTISING means the *use* of land, a *building* exterior, or a *structure* or thing, located other than within a *building*, for the purpose of *advertising* or promoting a product, service, place or event, that is for sale or rent, available, held, assembled, manufactured or otherwise located on the same *lot*.

ACCESSORY BUILDING means a subordinate *building* located on the same *lot* as the *principal building* or *use*, the *use* of which is incidental and accessory to that of the *principal building* or *use*.

ACCESSORY EMPLOYEE RESIDENTIAL means the *use* of a dwelling for the accommodation of one or more employees of a *business* conducted on the same *lot*.

ACCESSORY HOME OCCUPATION means a *use* relating to a craft, occupation or profession conducted within a *building* used for *residential use* or *accessory residential use* by a resident of the residential *building*.

ACCESSORY LIQUOR STORE means a use which is accessory to the principal use of a *public house* and provides for the retail sale of *alcoholic beverages* for off-site consumption, all as licensed by the Liquor Control and Licensing Act.

ACCESSORY OFFICE means a room or rooms in which business, clerical, or professional activities are conducted in an *industrial building*, and which is subordinate to an *industrial use*.

ACCESSORY OFF-STREET LOADING means a *use* providing for the loading needs generated by a permitted *use* on the same *lot*.

ACCESSORY OFF-STREET PARKING means a *use* providing for the temporary parking needs generated by a permitted *use*.

ACCESSORY ONE-FAMILY RESIDENTIAL means the *residential use* of one *dwelling unit* by the owner or operator of a *business*, or a pastor of a church conducted on the same *lot*.

Partial Information only refer to
City of Coquitlam Zoning Bylaw

ACCESSORY OPEN STORAGE means the storage, not within a *building*, of goods or things incidental to the *use* permitted on a *lot*.

ACCESSORY PRODUCE SALES means an *accessory use* providing for the retail sale of *agricultural* products produced on the same *lot*.

ACCESSORY RESIDENTIAL means a *use* ancillary to a *residential use* providing for activities customarily incidental to the accommodation and home life of a *person* or *person*s; and includes incidental horticulture, recreation, storage, and the keeping of three or fewer animals as household pets that are normally kept within a *dwelling unit* and are not kept for financial gain; but does not include repairing or salvaging and using parts of a motor vehicle owned by a *person* not residing in a *dwelling unit* on the same *lot*.

ACCESSORY RETAIL means the sale of goods to the end consumer of product manufactured or wholesaled on the same *lot*.

ACCESSORY USE means a *use* subordinate to and customarily associated with or incidental to, the *principal use* of the *lot* upon which the *accessory use* is located.

ADULT ENTERTAINMENT USE means a store that sells, rents, uses or shows an object (other than a contraceptive device), commodity, good, material, device, machine, service or entertainment which is designed or intended to be used in or is a depiction of, a sexual act as defined in the Motion Picture Act Regulations (B.C. Reg. 260/86).

ADULT VIDEO STORE means any premises licensed as an adult film retailer under the Motion Picture Act R.S.B.C. 1996, C.314, where adult motion pictures or videos or films that product or reproduce adult motion pictures are available for sale, rental or use.

ADVERTISING means a *use* of a *lot*, the exterior of a *building*, or of a *structure* of thing located other than within a *building*, including billboards, providing for the *advertising* or promoting of a product, service, place or event.

AGRICULTURAL means a *use* providing for the growing, rearing, cultivating, producing and harvesting of *agricultural* products, including the preliminary grading of such products for shipment; specifically includes mushroom growing, the keeping of dogs, horses, cattle, other livestock, swine, furbearing animals, poultry, pigeons, doves, bees, rabbits and other animals and birds; **excludes** *medical marijuana grow operation* and all manufacturing and processing other than primary grading.

ALCOHOLIC BEVERAGES means liquids for human consumption with an alcohol content above one percent by volume, including but not limited to beer, wine and spirits.

AMUSEMENT ARCADE means a place, *building*, area, room or segregated space normally accessible to or frequented by the public, in which three or more *amusement machine*s are available for *use*, for which a coin or token must be inserted, or an entry fee or membership fee is charged.

AMUSEMENT MACHINE means a device which is mechanically, manually, electronically, or automatically operated for the purpose of providing amusement, entertainment, recreation, a game or contest of any description, including video and computerized devices, but **excludes** pool and billiard tables, bowling alleys, and vending machines, but specifically excluding any electronic or mechanical device or machine used for the purposes of *electronic gaming* as defined in this Part.

ANIMAL SHELTER means a facility which may include indoor or outdoor runs for the impoundment of dogs, cats, and other animals who are either unlawfully at large, lost, abandoned or removed from their owner's premises due to mistreatment; does not include a veterinary clinic.

APARTMENT means a *building* used for three or more *dwelling unit*s, and includes such a *building* subdivided under the *Strata Property Act*; does not include a *townhouse*.

APPROVING OFFICER means the *Approving Officer* for the *City* as designed by *Council* and as defined under the *Land Title Act*.

ASSEMBLY means the gathering of *person*s for religious, charitable, philanthropic, cultural, recreational or private educational purposes, including churches, auditoriums, meeting rooms, *agricultural* halls, social halls, child-minding services, day-care centres, schools other than public schools, youth centres and group camps.

ASSISTED LIVING, REGISTERED, means housing and care that is registered under the *Community Care and Assisted Living Act* which provides hospitality and personal care services as defined under the Act.

AUTOBODY REPAIR means the repair of motor vehicles that have been damaged in accidents or that are being restored and can include the painting of motor vehicles.

AUTOMOBILE ACCESSORY means any device or thing customarily attached to or carried in a motor vehicle for the purpose of improving the efficiency or convenience of operation, improving the mechanical operation, enhancing the appearance, or increasing the safety of the motor vehicle.

AVERAGE BUILDING GRADE means the mathematical average of the elevations measured from the lower of natural or *finished grade* at each of the four outermost exterior corners of a *building*.

AVERAGE SLOPE means the slope within the *building siting area*.

AWNING means a weather protection device composed of non-rigid materials supported entirely from the exterior wall of a *building* by a fixed or retractable frame, and where at least 80 percent of the length of the *awning* projects a minimum of one metre from the face of a *building*.

BACHELOR DWELLING UNIT means a *dwelling unit* containing one *habitable room* plus kitchen facilities and a bathroom.

BEDROOM means a room within a *dwelling unit* intended or likely to be used for sleeping purposes.

BEVERAGE CONTAINER RETURN CENTRE means a use providing for the collection, sorting, preparation for shipping and temporary storage of empty beverage containers, and the

Partial Information only refer to
City of Coquitlam Zoning Bylaw

dispensing of deposit refunds; excludes processing of recyclable material other than the compaction of glass containers.
BICYCLE PARKING, LONG-TERM means a bicycle parking space for employees or residents of the building.

BICYCLE PARKING, SHORT-TERM means a bicycle parking space for visitors or patrons of the building.

BOARDING means the rental and occupation of a *sleeping unit* which is attached to or part of a *dwelling unit*, either with common cooking facilities, or where regular meals are provided; includes bed and breakfast accommodation.

BODYWORK means the work performed by a Bodyworker.

BODYWORKER means a person who:

(a) is a member in good standing of the Natural Health Practitioners of Canada or the Canadian Shiatsu Society of British Columbia;
(b) has completed a course recognized by either the Natural Health Practitioners of Canada or the Canadian Shiatsu Society of British Columbia which course requires at least 300 hours to complete, with at least half of those hours being classroom hours; and
(c) does not engage in touching of the areola, genitals or anus of a client.

BUILDING means a *structure* wholly or partly enclosed by a roof supported by air, walls or columns, and used for the shelter or accommodation of *person*s, animals, chattels or things; **excludes** tents and *recreational vehicle*s.

BUILDING BYLAW means the *City* of Coquitlam Bylaw No. 3598, 2003 as amended or superseded from time to time.

BUILDING INSPECTOR means the *General Manager Planning and Development* or his duly authorized designate.

BUILDING SITING AREA means the area of a *lot* contained within the required setbacks.

BUILDING SUPPLIES means lumber and other wood products, plumbing products, electrical products, masonry products, garden supplies and other goods normally associated with building and grounds construction, maintenance and repairs.

BUSINESS means carrying on a *commercial* or *industrial* undertaking of any kind or nature or the providing of professional, personal or other services for the purpose of gain or profit.

BYLAW ENFORCEMENT OFFICER means any person appointed by *Council* from time to time to enforce the *City's* bylaws.

CABARET means an establishment providing entertainment, including nightclubs and dancehalls, in conjunction with the consumption of *alcoholic beverages* on-site and

Partial Information only refer to
City of Coquitlam Zoning Bylaw

licensed under the *Liquor Control and Licensing Act*; **excluding** *public houses*, premises in *buildings* for *tourist accommodation use*, and *restaurants* with patron participation or similar limited entertainment.
CARRIAGE HOUSE means an accessory *dwelling unit* in a *building* on a *lot* that is detached from the *principal building* and is subordinate to the *principal building* in terms of size, scale and massing, yet it is attached to and located above a detached *accessory off-street building* or *structure* and has its own separate entrance directly from the exterior of the *building* or *structure*.

CASINO GAMING means an *assembly use* involving games such as blackjack, roulette and approved forms of wheels of fortune, as permitted by provincial regulations pursuant to the Criminal Code (Canada).

CHEQUE CASHING BUSINESS means an establishment, other than a bank or credit union that cashes cheques in exchange for a fee or percentage of the cheque's face value, or offers loans or advances in contemplation of a future wage or paycheque to be received.

CITY means the *City* of Coquitlam, a corporation under the *Local Government Act,* or the area incorporated as the *City* of Coquitlam, as the context requires.

CIVIC means a *use* providing for public functions, including government offices, public schools, colleges, and hospitals, community centres, courts, police stations, jails, libraries, museums, parks, playgrounds, cemeteries, highways, works yards and waterways.

COMMERCIAL means a *use* providing for the sale or rental of goods or services, for personal services, or for the servicing and repair of goods; and includes retail sales, wholesaling in conjunction with retail sales, *commercial* and government offices, personal services, recreation facilities, *commercial* schools, household services and household repairs, **excludes** *service station use*.

COMMERCIAL RECREATION means a *use* within an enclosed *building* for sports and active recreation where patrons are predominantly participants and any spectators are incidental and attend on a non-recurring basis. *Use*s may include athletic clubs, dance studios, health and fitness clubs, and racquet clubs.

COMMON AMENITY AREA means an outdoor or indoor area specifically designed for use by all residents living on site for cultural, social and recreational activities.

COMMUNITY CARE USE means a *use* providing for the care of *person*s in premises licensed or registered under the *Community Care and Assisted Living Act.*

CONCEALED PARKING means an *off-street parking use* located under cover below the grade of the site, or located within a *principal building*.

CONFECTIONERY STORE means a store that retails *confections*.

CONFECTIONS means candies, sweets and other treats intended as between meal snacks such as chocolate bars, chips, peanuts, gum, breath mints, ice cream bars, and similar

Partial Information only refer to
City of Coquitlam Zoning Bylaw

items, but excluding *groceries* commonly used in meal preparation and items that are or contain *alcoholic beverages*.

CONGREGATE HOUSING AND CARE means an *accessible residential* multiple-family building which contains two or more *Licensed Residential Care* units, *Assisted Living* units or *Supportive Housing* units which are supplemented by communal dining facilities, and/or housekeeping or personal care services.

CONTROLLED SUBSTANCE means a *controlled substance* as defined and described in the Federal *Controlled Drugs and Substances Act*, R.S.C. 1996, c.19 (Canada).

COOKING FACILITIES means any electronic, electrical gas, mechanical or manual equipment by which food of any sort can be cooked, heated, steamed or baked and including, without limitation, conventional ovens, microwaves, convection ovens, toaster ovens, cook tops, hot plates, camping stoves, barbecues, crock pots and electric frying pans, rice cookers, woks, grills and griddles, but does not include an electric kettle that can only be used for heating water.

COUNCIL means the *Council* of the *City* of Coquitlam.

CRAWL SPACE means the space between the underside of the floor system above and the ground surface or slab below, having a maximum vertical distance not exceeding 1.2 metres.

DATING SERVICE means the *business* of providing information to *person*s desirous of meeting other *person*s for the purpose of social outings.

DENSITY means a measurement of development intensity on a *lot* which can be measured either by *dwelling unit*s per hectare or by the ratio of *gross floor area* to *lot area*.

DETATCHED TWO-FAMILY RESIDENTIAL means a residential *use* that includes two detached principal *dwelling units* on a *lot*.

DEVELOPMENT PERMIT AREA means an area of land designated as a *development permit area* in Official Community Plans or other *Council* policies, as amended from time to time.

DRIVE-IN BUSINESS means an establishment with facilities for attracting and servicing prospective customers travelling in motor vehicles which are driven onto the site where the *business* is carried on and where the customer normally remains in the vehicle for service.

DRIVE-IN RESTAURANT means an eating establishment with facilities for attracting and servicing prospective customers travelling in motor vehicles which are driven onto the site where such establishment is located and where the customer is encouraged, either by the design of the facility or the packaging of food products, to remain in the vehicle for service and consumption of the food purchased; includes drive-up windows for patrons in motor vehicles; may or may not provide either indoor or outdoor seating.

DWELLING UNIT means one or more rooms which comprise of a self-contained housekeeping unit with a separate entrance, used or intended to be used as a domicile by one or more *persons* and usually containing one *kitchen*, living, sleeping and sanitary facilities.

Partial Information only refer to
City of Coquitlam Zoning Bylaw

ELECTRONIC COLLECTION FACILITY means a use providing for the collection of electronic equipment (limited to products specified in the Recycling Regulation under the *Environmental Management Act*, as amended), sorting, preparation for shipment and temporary storage of electronic equipment, and the associated administrative functions; excludes processing or dismantling of any kind.
ELECTRONIC GAMING means any activity or game of chance or skill for money or other valuable consideration carried out or played on an electronic or mechanical device or machine, including, without limitation, any type of slot machine, but excluding the purchase and sale of lottery tickets pursuant to a government lottery scheme.

EMERGENCY SHELTER means a facility offering temporary overnight accommodation at no cost.

EMPLOYMENT LIVING unit means space within a *building* or *structure* that can accommodate a permitted *commercial use* within an at-grade unit, a permitted *residential use* within an at-grade unit or a combination of the two.

ESCORT SERVICE means any person carrying on the business of providing or furnishing escorts or partners for social occasions.

EXOTIC DANCING means live entertainment involving any exposure of the genitals, pubic region, buttocks, anus, or female breast below the top of the areola, of any person.

EXTENSIVE RECREATION means a *use* providing for extensive open-air recreation facilities and the minor retail sales and services reasonably incidental to such facilities; includes *drive-in* theatres, driving ranges, firing ranges, golf courses, marinas, racetracks, ski facilities, sports clubs and stadiums.

EXTERIOR CLADDING means those components of a *building* which are applied to the *exterior sheathing* and are exposed to the outdoor environment to provide protection against wind, water and vapour. For purposes of this Bylaw, exterior cladding may include cladding materials, exterior insulation, vapour barriers and vented air cavities.

EXTERIOR LOT CORNER means the point of intersection of the *exterior side lot line* and the *front lot line*.

EXTERIOR SHEATHING means an exterior wall system that achieves structural *building* support without the application of an applied *exterior cladding*. For purposes of this Bylaw, *exterior sheathing* may be comprised of a solid construction material (e.g. concrete, plywood or wood composite) plus either embedded or exterior insulation. Interior finishing walls and interior insulation shall not be considered part of the *exterior sheathing*.

EXTERIOR SIDE LOT LINE means the *lot* line or lines not being the front or *rear lot line*, common to the *lot* and a *street*. Where the *lot* is a *strata lot*, the *exterior side lot line* is defined by a *roadway* instead of a *street*.

FAMILY means two or more *person*s related by blood, marriage, common-law relationship, adoption or foster parenthood.

FENCE means a structure, not being a building, intended for the purpose of total or partial physical and/or visual separation or enclosure of a property or portion thereof; includes a

Partial Information only refer to
City of Coquitlam Zoning Bylaw

wall, not being part of a building, intended for the purpose of total or partial physical and/or visual separation or enclosure of a property, does not include retaining wall. Materials used to construct a fence are limited to wood, masonry materials (excluding poured concrete), metal, pre-cast manufactured perforated or decorative concrete blocks or panels, and any combination thereof.
FINISHED GRADE means the elevation of the ground at any point adjoining each exterior wall of a *building* or *structure*.

FINISHED GROUND ELEVATION means the elevation of the ground at the four outermost exterior walls of a *building* or *structure*.

FIRE CHIEF means the *Fire Chief* appointed by *Council* from time to time.

FLEA MARKET means a market where individual sellers display new or used goods for sale to the public from stalls/tables which are provided by a general operator for a specific period of time, but shall not include any other establishment otherwise defined or classified herein.

FLOOR AREA means the sum of the areas of each floor of a *building* or that portion of the area of the floor of a *building*, as identified elsewhere in this Bylaw measured to the *exterior sheathing* of the *building* or the centerline of the demising wall.

FLOOR AREA RATIO, in the RTM-1 zone means the figure obtained by dividing the *floor area* (except that *floor area* will include *concealed parking* in the dwelling) by the *lot area*.

FRONT LOT LINE means the *lot* line or lines common to the *lot* and a fronting *street*, or where there is more than one fronting *street*, the *lot* line or lines common to either one of the fronting *street*s; for a panhandle-shaped *lot*, the *lot* line which is the *rear lot line* of the *lot* adjacent to the panhandle portion, is considered to be the *front lot line*. Where the *lot* is a *strata lot*, the front line is defined by a *roadway* instead of a fronting *street*.

GARDEN COTTAGE means an *accessory residential use* in a single *storey building* on a *lot* that is detached from the *principal building* and is subordinate to the *principal building* in terms of size, scale and massing.

GENERAL MANAGER ENGINEERING AND PUBLIC WORKS means the *General Manager Engineering and Public Works* appointed by *Council* from time to time.

GENERAL MANAGER PLANNING AND DEVELOPMENT means the *General Manager Planning and Development* appointed by *Council* from time to time.

GOLF COURSE USE means golf courses and all uses normally associated with golf courses.

GROCERIES means items including dairy products, produce, preserved foods, meat, fish, *non-alcoholic beverages*, baked goods and household supplies and specifically exclude *alcoholic beverages*.

GROCERY STORE means a *business* that retails *groceries*.

Partial Information only refer to
City of Coquitlam Zoning Bylaw

GROSS FLOOR AREA means the total area of all enclosed floors in each *building* on a *lot* measured to the *exterior sheathing* of the *building*, excluding: *concealed parking* areas, parts of the building below finished grade elevation that are not *habitable rooms*, *floor area* used for common maintenance, mechanical, or electrical purposes, racking systems that do not increase building occupancy load, *common amenity areas*, and completely enclosed and covered garbage and recycling facilities.
GROSS VEHICLE WEIGHT RATING means the weight indicated on a motor vehicle, as required by a license under the Commercial Transport Act or Motor Vehicle Act, as the case may be.

HABITABLE ROOM means a room used for cooking, eating, sleeping or human occupancy; **excludes** bathroom, utility room, workroom, furnace room, *crawl space*, garage and storage room.

HEIGHT means the vertical distance from any point on the *finished ground elevation* at the base of a *structure* to the highest point on such *structure* except for *one-family, detached two-family* and *two-family residential* uses, *carriage house use*, and *garden cottage use* in the RS-1, RS-2, RS-3, RS-4, RS-5, RS-6, RS-7, RS-8, RS-9, RS-10, RS-11, RTM-1, and RT-1 zones, in which zones *HEIGHT* means the vertical distance from the *average building grade* to the top of the parapet for flat roofs, defined as having a pitch of less than 3 in 12 covering at least 80% of all roof surfaces as measured in plan view, or to the uppermost peak for sloped roofs, as shown in the following diagram.

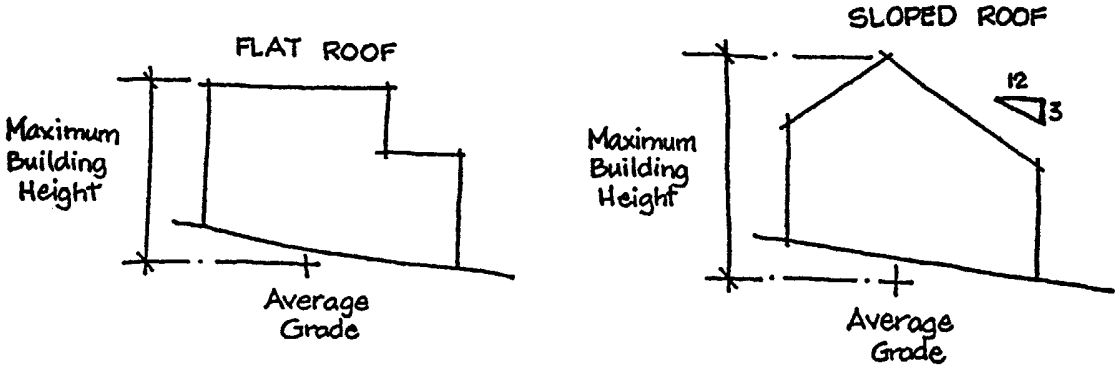

HOUSEHOLD GOODS means furniture, appliances, lighting and decorative items for *residential use*.

INDUSTRIAL means a *use* providing for the manufacturing, processing, fabricating, assembling, storing, transporting, distributing, wholesaling, testing, servicing, repairing, wrecking, recycling or salvaging of goods, materials or things for direct use or resale to individual business customers, and not for the general public.

INDUSTRIAL OFFICE means a *use* in which business, clerical, or professional activities are conducted in an *industrial* zone, limited to the following *uses*: architectural and engineering services, building trade contractors, data processing and related services, janitorial services, laboratories, scientific and technical research, development and test facilities, and security guard and patrol services.

Partial Information only refer to City of Coquitlam Zoning Bylaw

INTERIOR SIDE LOT LINE means the *lot* line or lines, not being the front or *rear lot line*, common to more than one *lot* or to the *lot* and a *lane*.

KITCHEN means a room used for the preparation, cooking or eating of food and containing *cooking facilities*, a sink, upper and lower cabinetry and ventilation for the *cooking facilities*.

LANDSCAPE SCREEN means a barrier composed of a continuous row of shrubs, trees, compact evergreen hedges or any combination thereof.
LANE means a highway which offers only a secondary means of access to a *lot* at its side or rear.

LICENSE INSPECTOR means the *License Inspector* appointed by *Council* from time to time.

LICENSED RESIDENTIAL CARE means housing and care that is licensed under the *Community Care and Assisted Living Act* which provides continuous professional care for residents.

LIQUOR STORE means a use where the retail sale of *alcoholic beverages* for off-site consumption is the principal use and is licensed under the *Liquor Control and Licensing Act*.

LOT means any parcel, block or other area in which land is held or into which land is subdivided, including a *strata lot* as defined.

LOT AREA means the total horizontal area within the property lines of a *lot,* except that:

(1) in the RM-1, zone, *lot area* means the total area of a *lot* plus one-half of adjacent streets, lanes, and dedicated public parks to a maximum of 13.5 metres, minus land covered by a natural body of water as defined by land survey, and land in easement for electrical or gas transmission lines, except where such easement is upon dedicated public park, multiplied by 75%. However, in no case shall the *lot area* be less than the area contained within the legal lot lines of a property minus land covered by a natural body of water as defined by land survey, and land in easement for electrical or gas transmission lines; and in all zones, where a *lot* is affected by more than one zone designation, the portion within each zone designation is to be determined separately as the applicable *lot area* for each affected portion;

(2) in the RT-2 zone, *lot area* means the area of the *lot* minus land covered by a natural body of water, as defined by its high water mark, land below the edge of a ravine, as defined by land survey, and land in easement for electrical or gas transmission lines.

LOT COVERAGE means the area covered by *buildings* and *structures* as measured from the outermost walls and/or supporting columns expressed as a percentage of the *lot area*.

LOT SIZE means the amount of land occupied by one *lot* on a plan of *subdivision* or a registered Land Title Certificate and may be measured by area, width, depth or any combination thereof.

LOT WIDTH means:

i. on a rectangular lot, the horizontal distance between side *lot* lines measured at the *front lot line*; and

Partial Information only refer to City of Coquitlam Zoning Bylaw

ii. on an irregularly shaped lot, the sufficient area to permit a rectangular-shaped first floor of a *principal building*, having not less than 100 m² in area, a length of not less than 7.5 metres on one side, and meeting the setback requirements of this bylaw as shown in the following diagram.

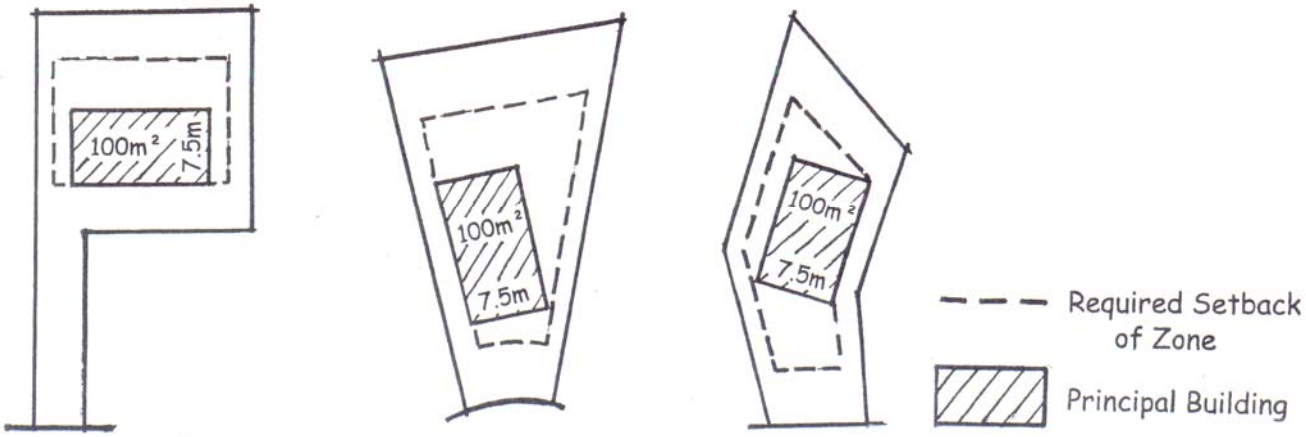

MANAGER FINANCIAL SERVICES means the *Manager Financial Services* appointed by *Council* from time to time.

MANDATORY COMMERCIAL STREET FRONTAGE means a *street* frontage which is delineated in an Official Community Plan along which development will be encouraged to provide a continuous *commercial* storefront facade or street-wall.

MARIJUANA DISPENSARY means an establishment selling or otherwise dealing in a substance listed in Schedule II of the *Controlled Drugs and Substances Act*, R.S.C., 1996, c.19 (Canada), except as permitted and authorized under the Federal *Marihuana Medical Access Regulations*.

MASSAGE PARLOUR means a business that will offer massage and body rub services, or either of them, to be performed by one or more individuals who are not registered massage therapists in the Province of British Columbia.

MEDICAL HEALTH OFFICER means the *Medical Health Officer* as appointed from time to time by the appropriate health authority.

MEDICAL MARIJUANA GROW OPERATION means a *use* providing for the growing and cultivation of a *controlled substance*.

METHADONE CLINIC means a premise used principally to prescribe methadone to persons with opiate addiction and may include the provision of counseling and other support services to those persons.

METHADONE DISPENSARY means a business selling or filling methadone prescriptions for customers.

MINI-WAREHOUSE means a completely enclosed *building* or series of completely enclosed buildings that include separate storage units which are rented to customers having exclusive and independent access to their respective units for the storage of residential, recreational or *commercial* goods and includes the accessory sale of packing supplies.

Partial Information only refer to City of Coquitlam Zoning Bylaw

MOBILE HOME means a *structure* manufactured as a unit, intended to be occupied in a place other than at its manufacturer, and designed as a *dwelling unit*.

MOBILE HOME PARK means a *use* providing for the accommodation of *person*s in two or more *mobile home*s, and includes permitted sales.

MOBILE HOME SPACE means an area of land designated for the installation of one *mobile home* with permissible additions and situated within a *mobile home park*.

MODULAR CONTAINER means a purpose-designed container for holding of goods, which is intended to be placed on a ship, truck or railcar.

NATURAL GRADE with reference to residential development in established neighbourhoods where the majority of *lot*s have been developed with one- or two-*family* housing for more than 4 years at the date of adoption of Bylaw 2418, 1992 and not requiring *subdivision*, means the undisturbed ground level or elevations as determined by a registered land surveyor on a *lot* at each of the points used in calculating the *average building grade*; whereas in reference to residential development within areas which require *subdivision*, *NATURAL GRADE* means the elevations shown on the grading plan for the *subdivision*.

NON-ACCESSORY OFF-STREET PARKING means a *use* providing for a "stand-alone" parking *lot* and/or *structure* for temporary parking needs not accessory to a *use*.

NON-ALCOHOLIC BEVERAGES means liquids for human consumption with an alcohol content of one percent or less by volume.

NON MARKET HOUSING means self contained, independent living *dwelling unit*s targeted to low and moderate income households such as housing co-operatives and seniors and *family* non profit projects.

OFF-STREET PARKING means a *use* providing *parking space*s for the temporary storage of vehicles not on a public street or right-of-way, and includes *accessory off-street parking* and *non-accessory off-street parking*.

ONE-FAMILY RESIDENTIAL means a *residential use* in which the *building* on a *lot* is used for one *dwelling unit*; may also contain a *secondary suite*.

OPTIONAL COMMERCIAL STREET FRONTAGE means a *street* frontage delineated in the Official Community Plan, along which development will provide a continuous at-grade streetwall for either a *commercial use* or an *employment living use*.

OUTERMOST BUILDING FACE means a vertical plane parallel to a property line and passing through those points of the exterior *wall* of a building that are closest to the property line. The *wall* establishing the *outermost building face* must be that *wall* of the *building* closest to the property line and must be situated entirely within the *building siting area*.

PARKING SPACE means a space within a *building* or a parking area for the parking of one vehicle, excluding driveways, ramps, columns, office and work areas.

PAWN means the deposit of property as a pledge or collateral security for a debt.

PAWNBROKER/PAWNSHOP means an establishment that carries on the trade or business of taking goods and chattels in pawn, or who keeps a store, shop or other premise for the purpose of carrying on such trade or business.

Partial Information only refer to
City of Coquitlam Zoning Bylaw

PERIMETER WALL AREA means the total area of exterior *walls* facing in one direction measured from the finished *finished grade* to the underside of the eaves. *Walls* or portions of *walls* situated within an angle of 45 degrees (in plan or vertical section view) from a *wall* forward of the *wall* or portion of *wall* under consideration must not be included in the calculation of *perimeter wall area* as shown in the following diagram.

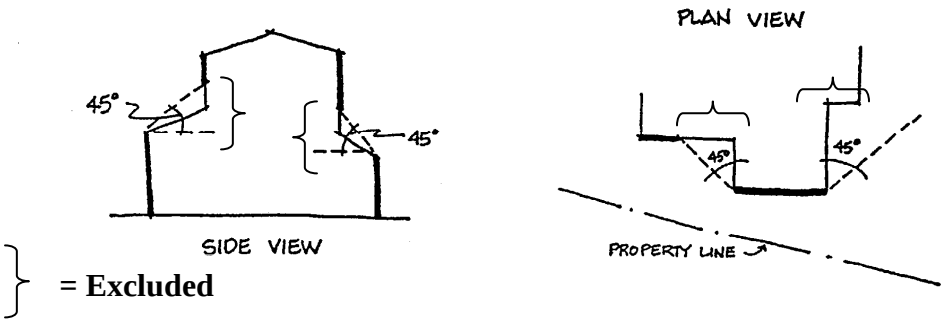

} = **Excluded**

PERIMETER WALL HEIGHT means the vertical distance measured at and up the *wall* establishing the *outermost building face*, from the lower of *natural grade* or *finished grade* to the top of the roof surface of the *building*. *Walls* situated entirely within an angle of 45 degrees (in plan section view taken at grade) from the *wall* establishing the *outermost building face* must not be included in the calculation of *perimeter wall height*, except that such *walls* in their entirety must be included in the calculation if a portion of the *wall* falls outside the angle of 45 degrees described previously. Gable ends and decks must not be included in the calculation of the average *perimeter wall height*. For the purposes of the definition of *perimeter wall height:*

(a) a plane defined by a vertical face of a roofed porch must be considered *a wall*, and

(b) an enclosing element of a *crawl space* or basement must not be considered a *wall* unless such *crawl space* or basement is surmounted by a *storey*.

PERSON means any legal entity and includes an individual, firm, society, cooperative, association, organization, partnership, trust company or corporation.

PLANNED SHOPPING CENTRE means a group of *commercial* establishments built on a site which is planned, developed, owned and managed as a unit, related in location, size and type of establishment to the trade area that the unit serves, including one or more prime tenants in the form of a drugstore, supermarket or department store, and occupying a site at least 8000 m^2 in area.

PRINCIPAL BUILDING means a *building* that accommodates the *principal use* of a site, and may accommodate one or more *accessory* uses;

PRINCIPAL USE means the main purpose for which land, *building*s or *structure*s are used.

PRIVATE HOSPITAL means a *use* providing for the care of the sick, injured or aged, other than in a public hospital; includes *private hospital*s, private medical centres, and senior's housing facilities that are licensed under the *Hospital Act*.

Partial Information only refer to
City of Coquitlam Zoning Bylaw

PUBLIC HOUSE means an establishment where the sale of *alcoholic beverages* for on-site consumption is the principal use and is licensed under the Liquor Control and Licensing Act; **excludes** *cabarets*.

PUBLIC SERVICE means a *use* providing for the servicing of the *City*, where such *use* is established by the *City*, by another government body, or by a corporation or company operating under the *Utilities Commissions Act*, includes broadcasting transmission facilities.

QUADRUPLEX RESIDENTIAL means a *residential use* that includes a total of four *dwelling units* on a *lot*.

REAR LOT LINE means the *lot* line opposite to and most distant from the *front lot line* or, where the rear portion of the *lot* is bounded by intersecting side *lot* lines, is deemed to be the point of such intersection.

REAR YARD means the portions of a *lot* located between the *rear lot line* and the outermost projection of the rear walls of a *principal building* and extends across the full width of the *lot*.

RECREATIONAL VEHICLE means a temporary living accommodation for travel or recreational purposes and includes motor home, camper, travel *trailer*, tent *trailer* or boat but does not include a *mobile home*.

RESIDENTIAL FLOOR AREA means the sum of the internal private *floor area*s within the *dwelling unit*s in all *building*s on a *lot*; includes areas occupied by internal walls and partitions within a *dwelling unit*; **excludes** balconies, common stairwells, common corridors, cellars, *concealed parking* areas and common recreation or service facilities.

RESIDENTIAL SALES CENTRE means a *building* used for the marketing of residential developments or residential land.

RESIDENTIAL USE means a *use* providing for the accommodation and home life of one or more *person*s, including activities customarily incidental to the accommodation and home life of a *person*, including horticulture, recreation, storage, and the keeping of three or fewer animals as household pets that are normally kept within a *dwelling unit* and are not kept for financial gain; does not include repairing or salvaging and using parts of a motor vehicle owned by a *person* not residing in a *dwelling unit* on the same *lot*, or *tourist accommodation*, *private hospital* or *assembly* uses.

RESOURCE means a *use* providing for the conservation, management and extraction of primary forest, mineral and other *resource* materials; includes the preliminary grading, cutting or crushing of those materials for shipment, and the accessory storage of motor vehicles and equipment; does not include the storage of derelict motor vehicles, scrap or junk, manufacturing of any product, or any processing not specifically included.

RESTAURANT means an establishment where food is sold to the public and where provision is made for its consumption on the premises as the *principal use* and may include the serving of *alcoholic* and/or non-*alcoholic beverages* but excludes the retail sale of *alcoholic beverages* for off-site consumption.

ROADWAY means a driveway which is not a *street* or *lane* over a *lot* or a portion of common property on which an access route is located in a bare land strata plan.

Partial Information only refer to
City of Coquitlam Zoning Bylaw

SCHOOL, COMMERCIAL means educational facilities other than those operated by government; may include instruction in the arts, sports, *business*, self-improvement, academics; includes trade schools.

SCHOOL, PRIVATE means a school providing academic instruction as regulated under provincial statutes, which is maintained for philanthropic or religious purposes and may include a boarding school but excludes any other school defined in this Bylaw.

SCHOOL, PUBLIC means a place of instruction maintained at the public expense under the School Act.

SCHOOL, TRADE means a post-secondary school, other than a public school, in which a technical trade related to construction, electronics, mechanical or transportation (automotive, marine or aviation) is principally taught.

SCRAP METAL means:

(a) previously used ferrous metal made principally of iron, steel, or tin;

(b) previously used non-ferrous metal including all metal or alloy that is generally free of iron and includes, copper, brass, bronze, aluminum, zinc, magnesium, lead, and nickel.

SCRAP METAL DEALER means any person licensed pursuant to the City's Business License Bylaw, in force from time to time, to carry on the business of selling, purchasing, or otherwise dealing in Scrap Metal.

SECONDARY SUITE means an accessory *dwelling unit* contained within a *building* of residential occupancy containing only one principal *dwelling unit*.

SERVICE STATION means a *use* providing for the retail sale of motor fuels or lubricating oils; may include the servicing or repair of motor vehicles, the sale of automobile accessories, and the rental of *trailer*s and motor vehicles; **excludes** all other sales and services.

SLEEPING UNIT means one or more rooms containing no cooking facilities or sink, used for the lodging of *person*s.

SOCIAL ESCORT SERVICE means the *business* of providing or furnishing the services of male or female escorts for social occasions.

SPECIAL EVENT means a circus, concert, temporary amusement park, show, farmers market, cultural festival or other itinerant show or entertainment on *City* property for which a valid Facility Use Licence has been issued by the City's Parks, Recreation and Culture Department.

SPECIALTY EVENT VENDING BUSINESS means a *business* offering for sale goods or services during a *special event*.

SPECIALTY FOOD RETAIL means a *use* providing for the retail sale of *groceries* or prepared food for take away or on-site consumption. This *use* includes cafes, coffee houses, delicatessens, fish markets, meat markets, ice cream parlours and bakeries, and may be included as an accessory use to a *grocery store* use.

Partial Information only refer to
City of Coquitlam Zoning Bylaw

STOREY means the first *storey* and *storeys* above the first *storey* as determined under the BC Building Code, established pursuant to Section 692 of the *Local Government Act*, RSBC 1996 as amended and superseded from time to time.

STRATA LOT means a *strata lot* contained within a bare land strata plan as defined in the *Strata Property Act*.

STREET means a highway which affords the principal means of access to abutting *lot*s.

STREET-ORIENTED VILLAGE HOME RESIDENTIAL use means a residential use consisting of one dwelling unit per *principal building* vertically attached by party walls to one or more *principal building*/s with each individual *principal building* located on a separate *lot* (including a *strata lot*) abutting a *street* and a *lane*; except that in the case of special needs and/or affordable housing on a site or sites owned by the *City* of Coquitlam and/or a registered non-profit agency, each *principal building* may contain more than one dwelling unit.

STRUCTURE means any construction fixed to, supported by or sunk into land or water.

SUBDIVISION means the division of land into one or more parcels by plan, descriptive words, or otherwise, under the *Strata Property Act* or *Land Title Act*.

SUPPORTIVE HOUSING means housing that is designed to be accessible, in which housing and a range of hospitality services are provided by or through the operator and any personal care for residents is provided by someone other than the operator.

TATTOO PARLOUR means an establishment in the business of creating tattoos or permanent markings made by inserting ink into the layers of skin to change the pigment for decorative or other reasons.

TEMPORARY BUILDING means a *building* which is used for a specified period of time, at the end of such time the *building* can be removed from the *lot*.

TOURIST ACCOMMODATION means a *use* providing for the accommodation of the transient public in individual *dwelling unit*s or *sleeping unit*s, or by providing space for *recreational vehicle*s or *trailer*s for this accommodation; may include dining facilities, but does not include *mobile home*s.

TOWNHOUSE(S) means a single building comprised of three or more dwelling units separated one from another by party walls extending from foundation to roof, with each dwelling unit having a separate, direct entrance from grade and includes all row, linked, patio, garden, court or other housing which meets such criteria.

TRAILER means any vehicle, coach, house-car or conveyance designed and licensed to travel on the highways, constructed or equipped to be used as temporary living or sleeping quarters by travellers.

TRANSITIONAL HOUSING means independent, temporary housing that provides support services for people who are homeless or at-risk of homelessness.

TRANSPORTATION DEMAND MANAGEMENT means the provision of continuous services or facilities that reduce the demand for private vehicle use or an *off-street parking* space.

TRIPLEX RESIDENTIAL means a *residential use* that includes a total of three *dwelling units* on a *lot*.

TWO-FAMILY DWELLING means a single *building* containing two *dwelling unit*s, neither of which is a *secondary suite*; and includes semi-detached houses only where joined by a common wall which links contiguous *habitable room*s.

TWO-FAMILY RESIDENTIAL means a *residential use* in which the *principal building* on a *lot* is used for two *principal dwelling unit*s.

UNDERGROUND PARKING means an *off-street parking use* contained within an *underground structure*.

UNDERGROUND STRUCTURE means construction of any kind sunk into the ground and which at no point projects above *finished grade* except at driveway and stairwell entrances and except as permitted in this bylaw.

USE means the purpose for which any *lot*, *building* or *structure* is designed, arranged or intended, or for which it is occupied or maintained.

VENDING CART means a self-contained mobile apparatus or other non-motorized vehicle, excluding a *vending vehicle*, used for the sale of goods, wares, merchandise or foodstuffs, that remains stationary, even when not serving customers.

VENDING VEHICLE means a self-contained motorized vehicle used for the sale of goods, wares, merchandise or foodstuffs, that remains stationary, even when not serving customers.

WALL means any building element with a slope of 60 degrees or more to the horizontal; does not include a wall which is utilized as a fence, or a retaining wall.

WHOLESALE SALES means the storage and sale of goods to a retailer or another wholesaler, rather than to the end consumer or general public.

202 Interpretation

(1) Gender/Number

Wherever the singular or masculine is used in this bylaw, it includes the plural or the feminine or body politic or corporate as the context or the parties so require.

(2) "Must" Imperative

In this bylaw, "must" is to be construed as imperative.

(3) Severability

If any part, section, subsection, paragraph or any other portion of this bylaw is held to be invalid by a court of competent jurisdiction, the invalid portion must be severed and the remainder of this bylaw is deemed to have been enacted without the invalid portion.

Partial Information only refer to City of Coquitlam Zoning Bylaw